EE6094
CAD for VLSI Design

PA2
Partitioning

Andy, Yu-Guang Chen
Assistant Professor, Department of EE
National Central University
andyygchen@ee.ncu.edu.tw
Slides Credit: TA Yi-Ting Lin

Outline

- Problem description
- Input format
- Output format
- Evaluation

Outline

- Problem description
- Input format
- Output format
- Evaluation

Problem description

- Partition the cell set into two groups and minimize the cut size
- Input
  - A net-list for a circuit
- Output
  - The partition result and the cut size

Problem description

- Constraints
  - |size(A) – size(B)| <= n/5, where n is the number of cells in the circuit and n always >= 10
  - The runtime of your program is limited to at most 10 minutes per testcase
- Algorithm
  - You are ask to implement the Fiduccia-Mattheyses (FM) Algorithm
  - You can use any method to find the initial solution

Outline

- Problem description
- Input format
- Output format
- Evaluation

Input format

```
NET n1 { c2 c3 c4 }
NET n2 { c3 c7 }
NET n3 { c3 c5 c7 }
NET n4 { c1 c3 c5 c7 }
NET n5 { c2 c4 c8 }
NET n6 { c4 c6 }
NET n7 { c2 c6 c8 }
```

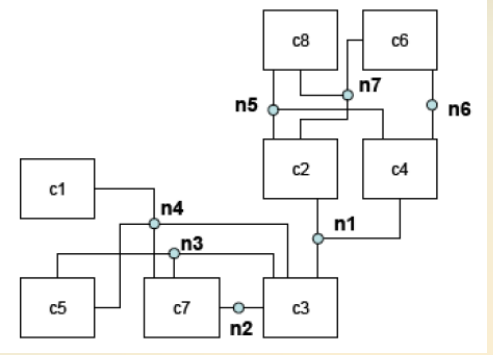

(The net and cell may be provided in random sequence.)

Outline

- Problem description
- Input format
- Output format
- Evaluation

Output format

```
cut_size 1
A
c1
c3
c5
c7
B
c2
c4
c6
c8
```

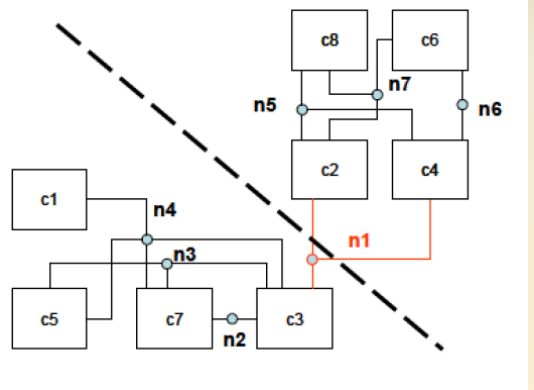

Outline

- Problem description
- Input format
- Output format
- Evaluation

Evaluation

- Correctness (40%)
- Bonus (10%)
- Quality (10%)
- Readability (10%)
- The report (10%)
- Demo session (30%)

Correctness

- We will have 2 public cases and 3 hidden cases to judge your program
- TA will test your program with your makefile:
  - make all
  - make run input=*input_file_path* output=*output_file_path*
  - make clean
- You will get the point if you correctly implemented the FM algorithm and pass the checker for each cases

Bonus

- If you use any algorithm taught in class or any other method (excluding random allocation) to generate the initial solution
- Explain your approach in the report.
- You can earn up to 10 bonus points according to your method

Quality

- We will rank the cut size for each cases to judge the quality of your project

Readability

- Function cuts
- The name of the variables
- Typesetting

The report

- In your report, you have to include at least:
  - Compilation and execution
  - Completion
  - Method of your design
  - Test cases results
  - Hardness
  - Suggestions
- We don’t restrict the report format and length

The report

- You can also include
  - Cover
  - Flow charts
  - Code explanations
    - Concepts, functions, variables, etc.
- The grading of the report will compare yours with others
- Remind the resolution of the figures

Demo session

- You must show up in the demo session, otherwise you will get 0 point of this PA
- Be familiar with your code

Q&A

Email: ruby68680@gmail.com

Andy, Yu-Guang Chen
Assistant Professor, Department of EE, NCU
Email: andyygchen@ee.ncu.edu.tw
FB: Yu-Guang Chen
IG: ncu.eda.andy
Google account: andyygchen.ncu